SCAN FOR BILT. 3D INSTRUCTIONS

POWERED BY BILT INTELLIGENT INSTRUCTIONS®

IMPORTANT / IMPORTANTE

BILT®

Scan for easy 3D instructions

Download the BILT app before you begin

Scannez pour des instructions faciles en 3D

Téléchargez l'application BILT avant de commencer

Escanea para instrucciones fáciles en 3D

Descargue la aplicación BILT antes de comenzar

Download on the App Store

GET IT ON Google Play

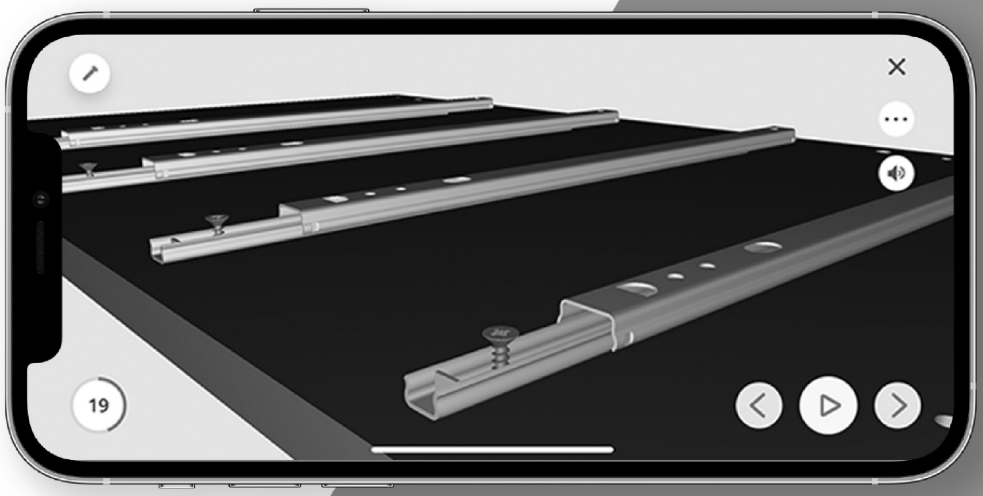

tvilum

80146

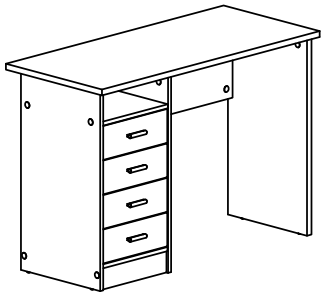

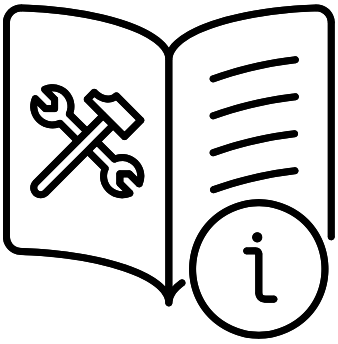

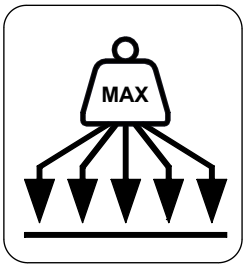
MAX

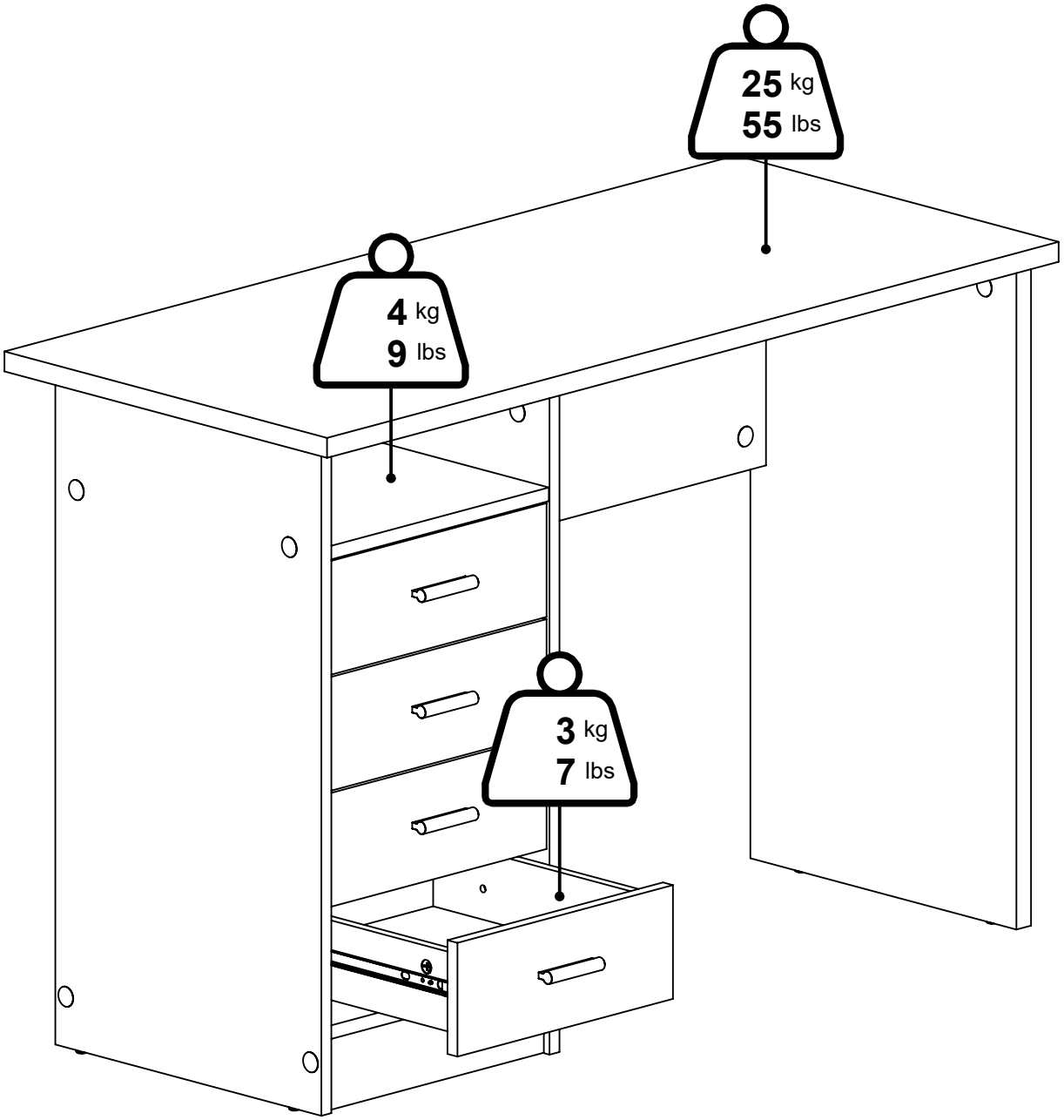
25 kg
55 lbs
4 kg
9 lbs
3 kg
7 lbs

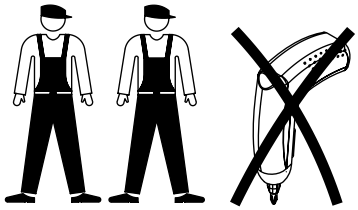

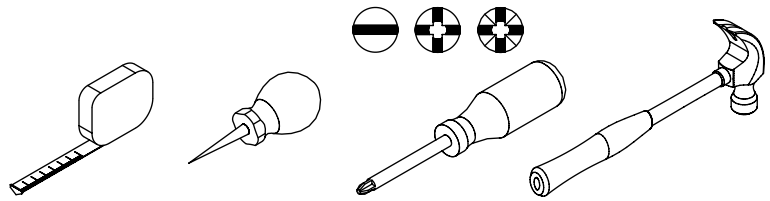

10901
x1

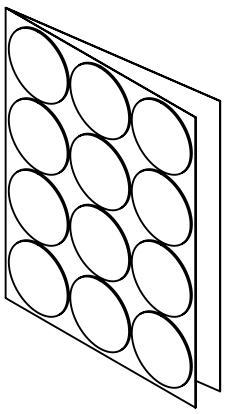

20203
x30

20228
x16

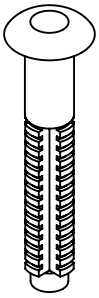

23006
x1

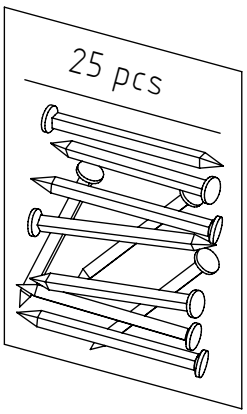

25233
x16

25610
x8

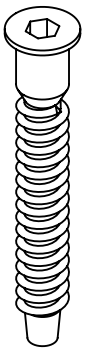

26020
x16

41404
x8

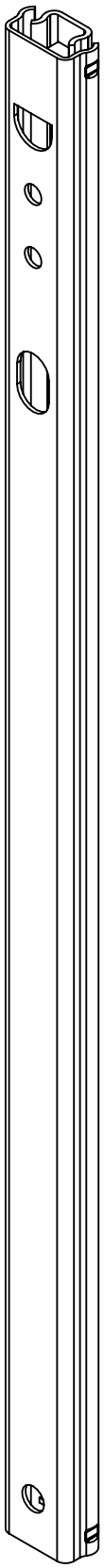

26214
x8

26230
x8

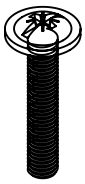

31513
x14

31561
x4

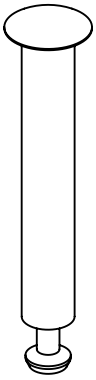

31687
x18

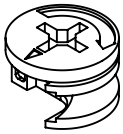

63001
x6

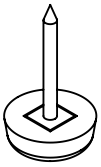

80220
x4

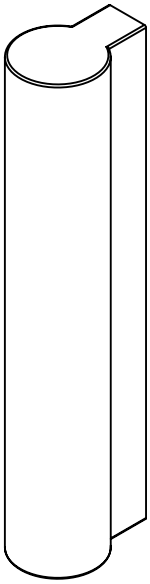

97642
x1

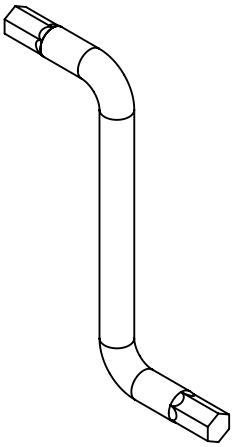

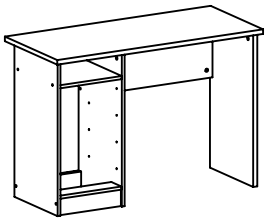

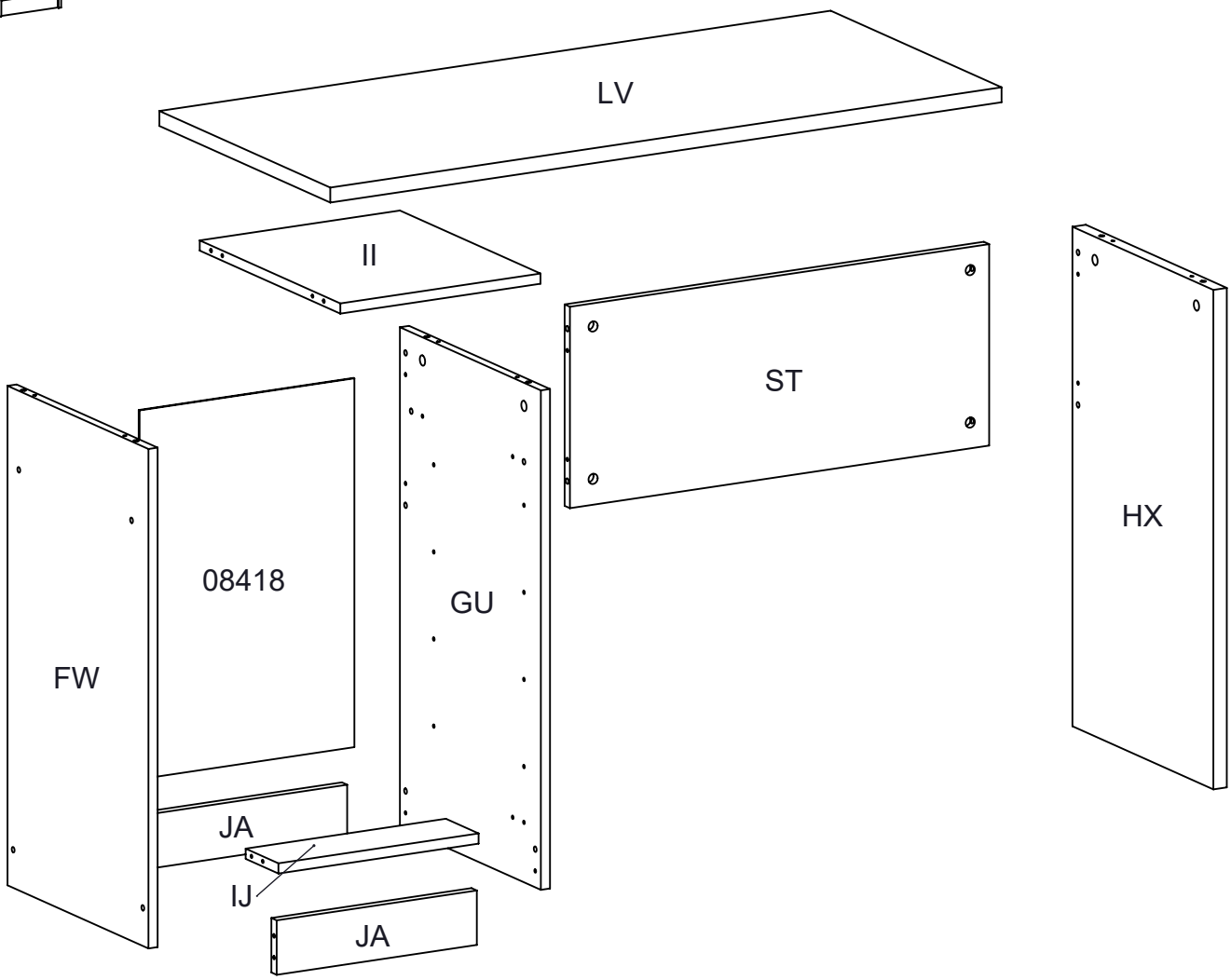
LV
II
ST
HX
08418
GU
FW
JA
IJ
JA

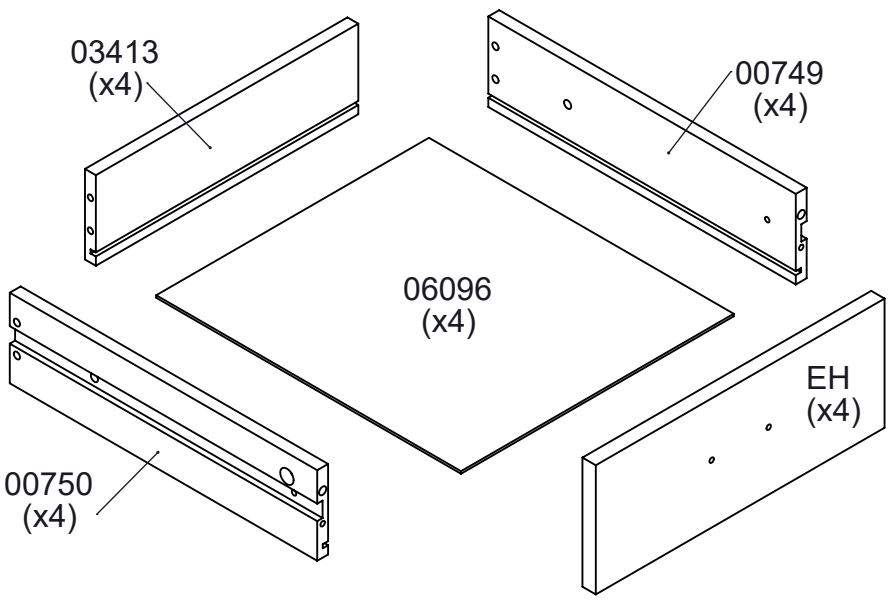
03413
(x4)
00749
(x4)
06096
(x4)
EH
(x4)
00750
(x4)

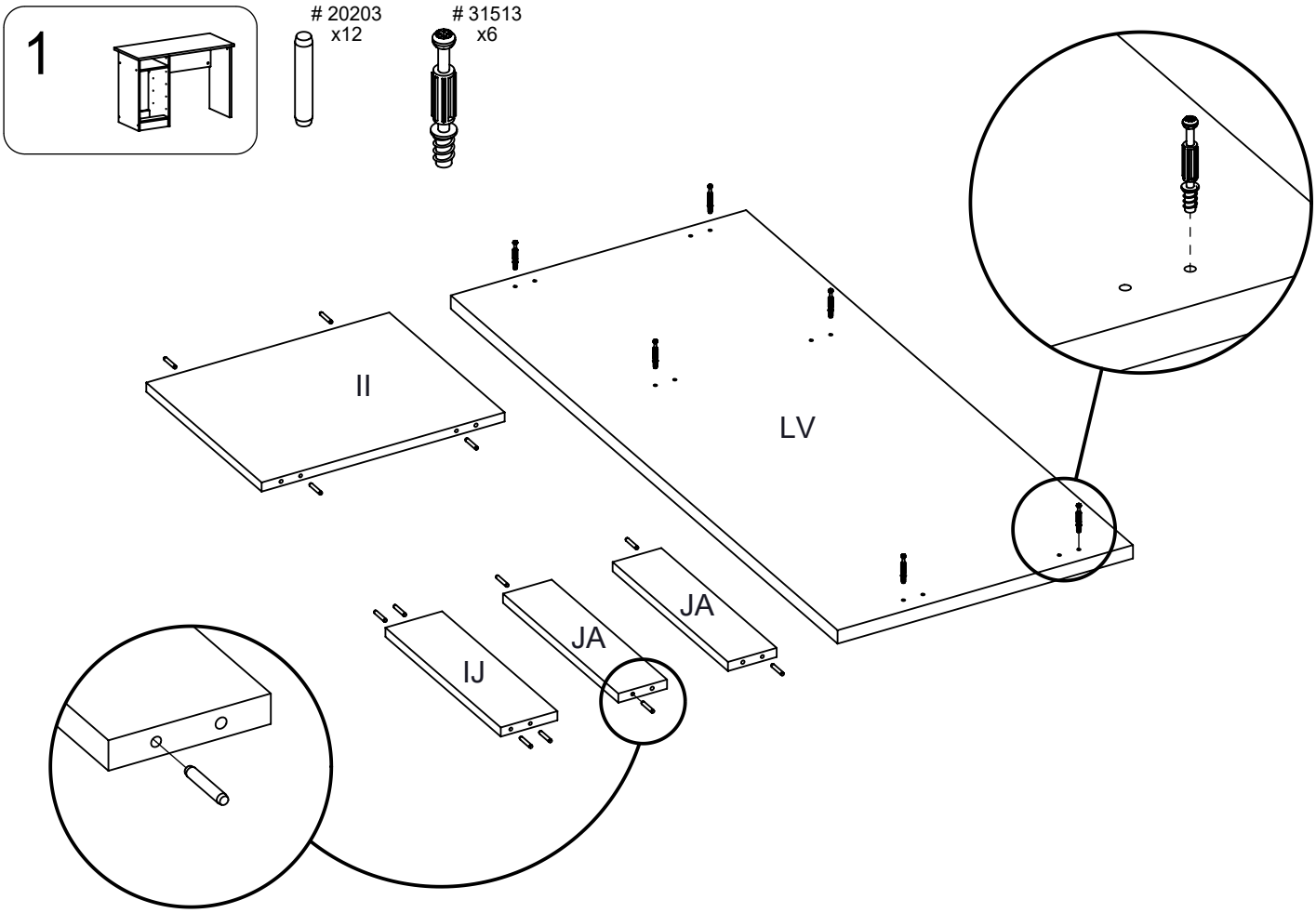
1
20203
x12
31513
x6
II
LV
JA
JA
IJ

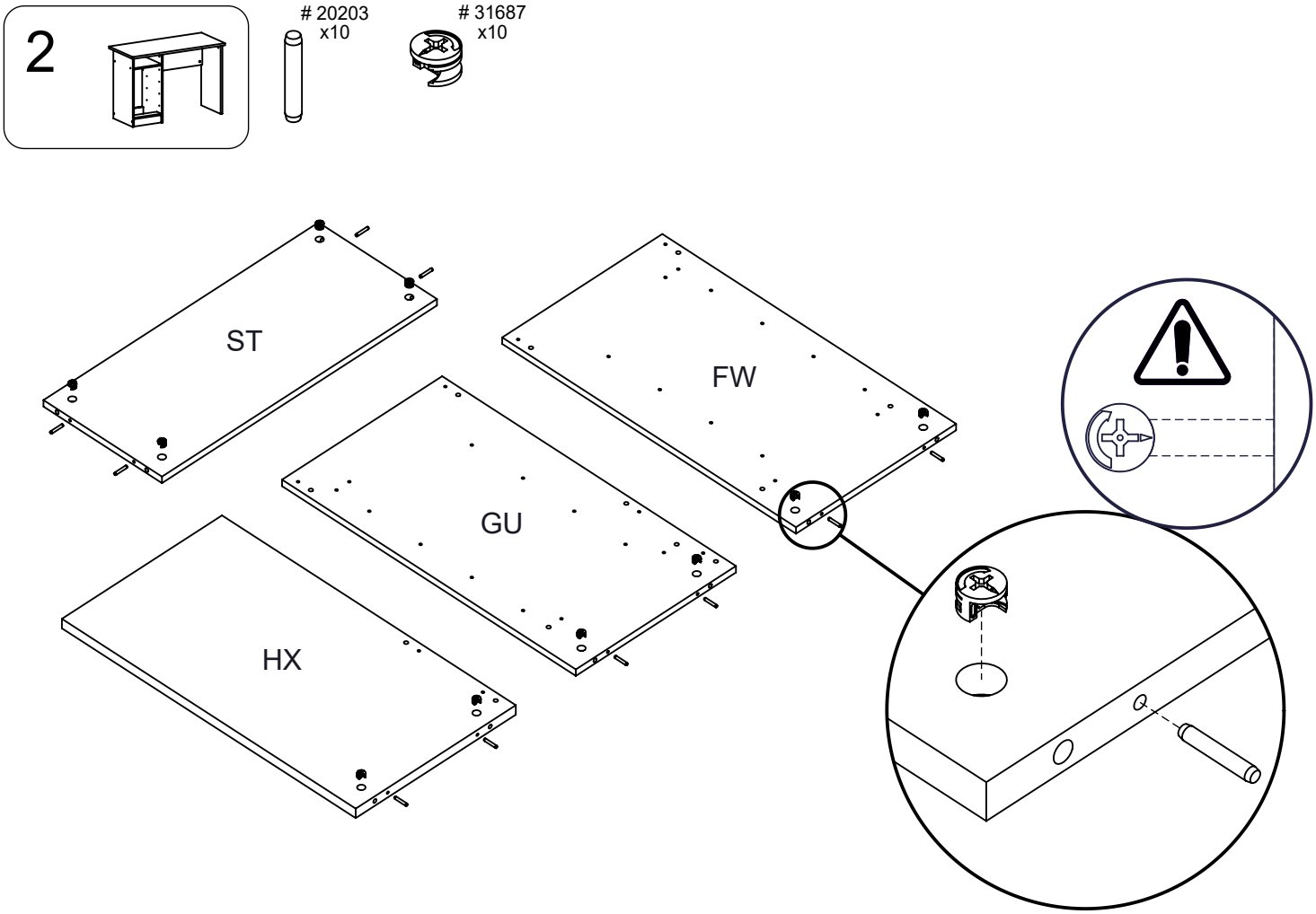
2
20203
x10
31687
x10
ST
FW
GU
HX

3

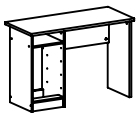

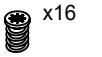

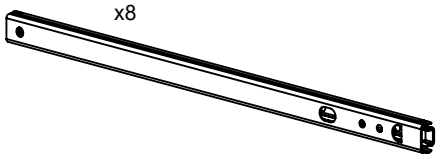

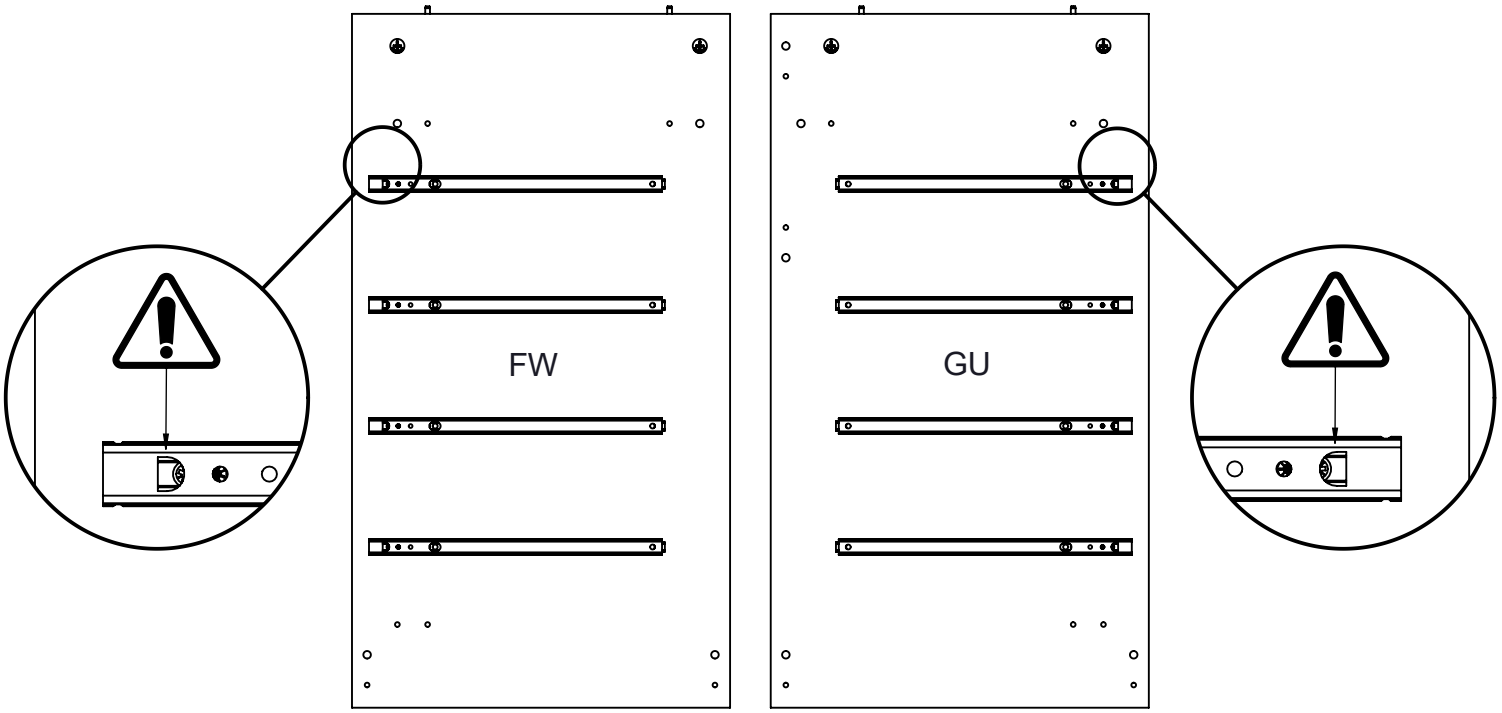

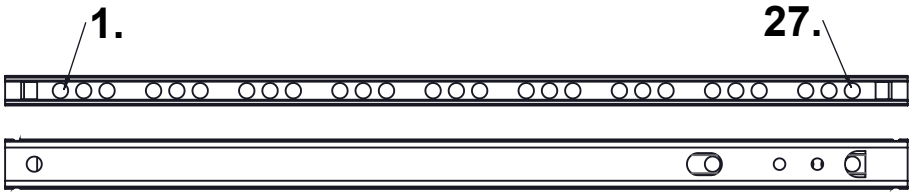

1.

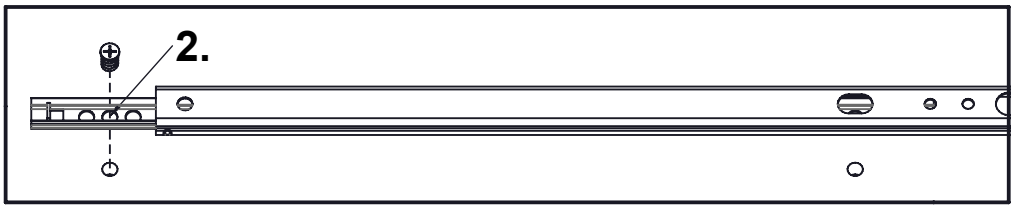

2.

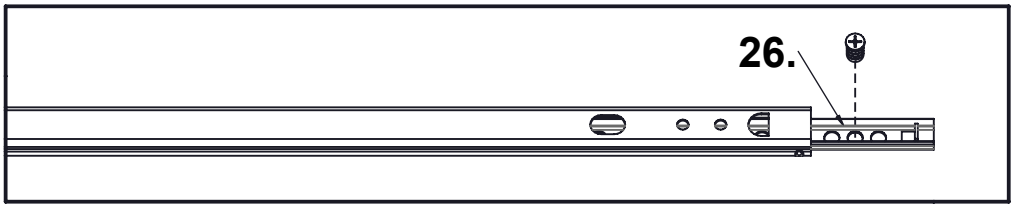

3.

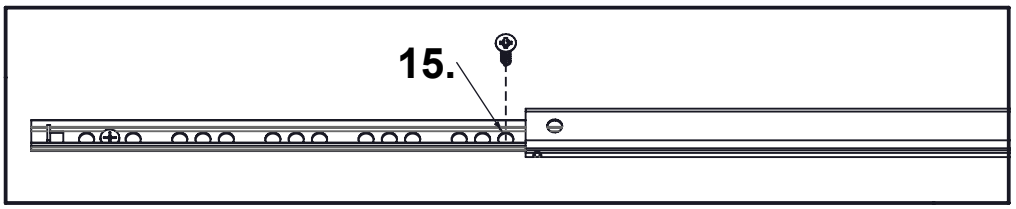

4.

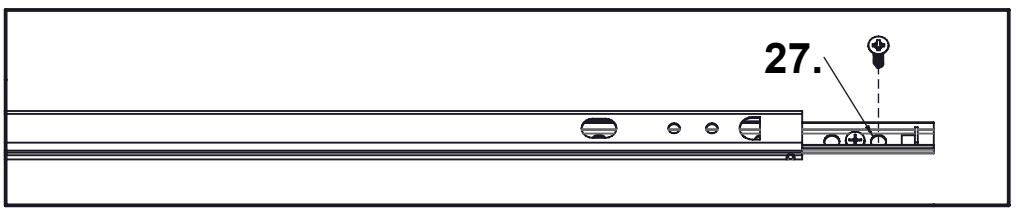

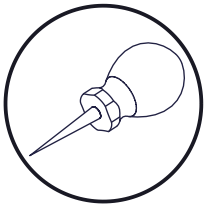

4

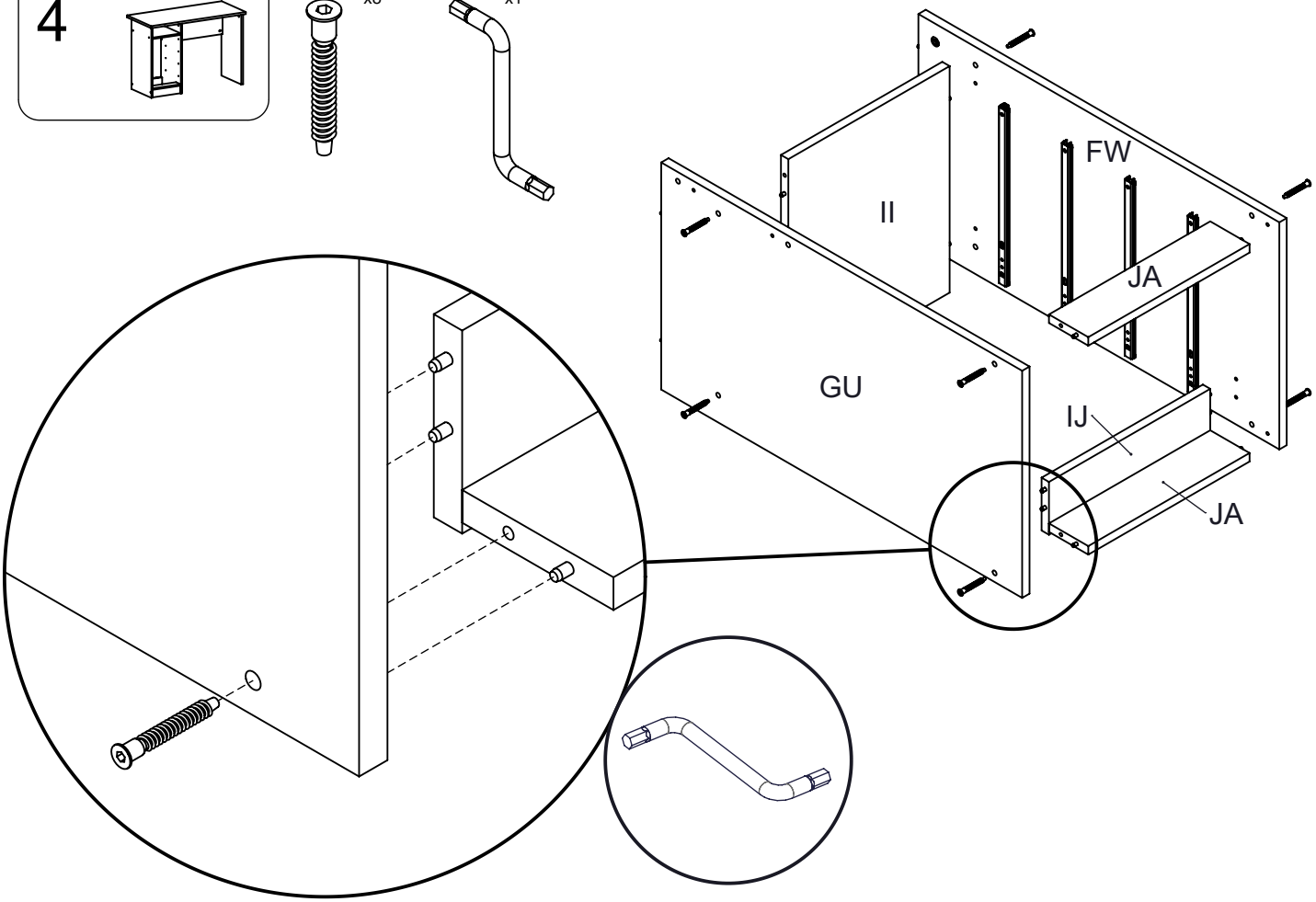

5

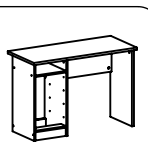

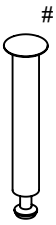

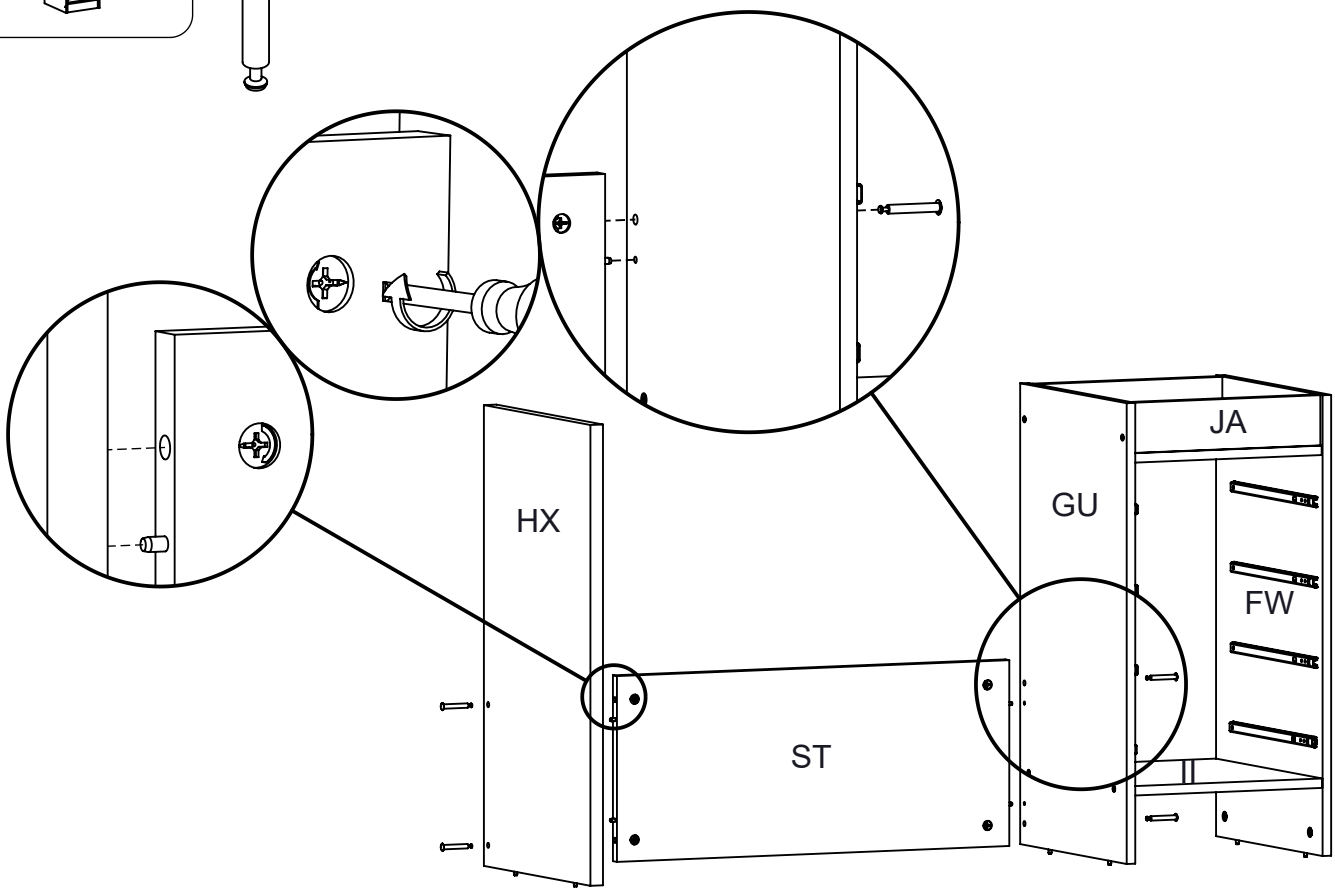

6

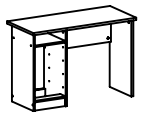

#23006
x1

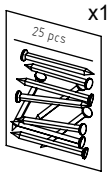

63001
x6

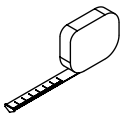

A=B

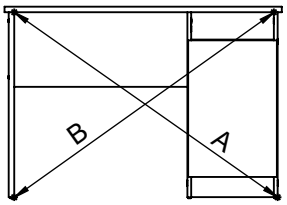

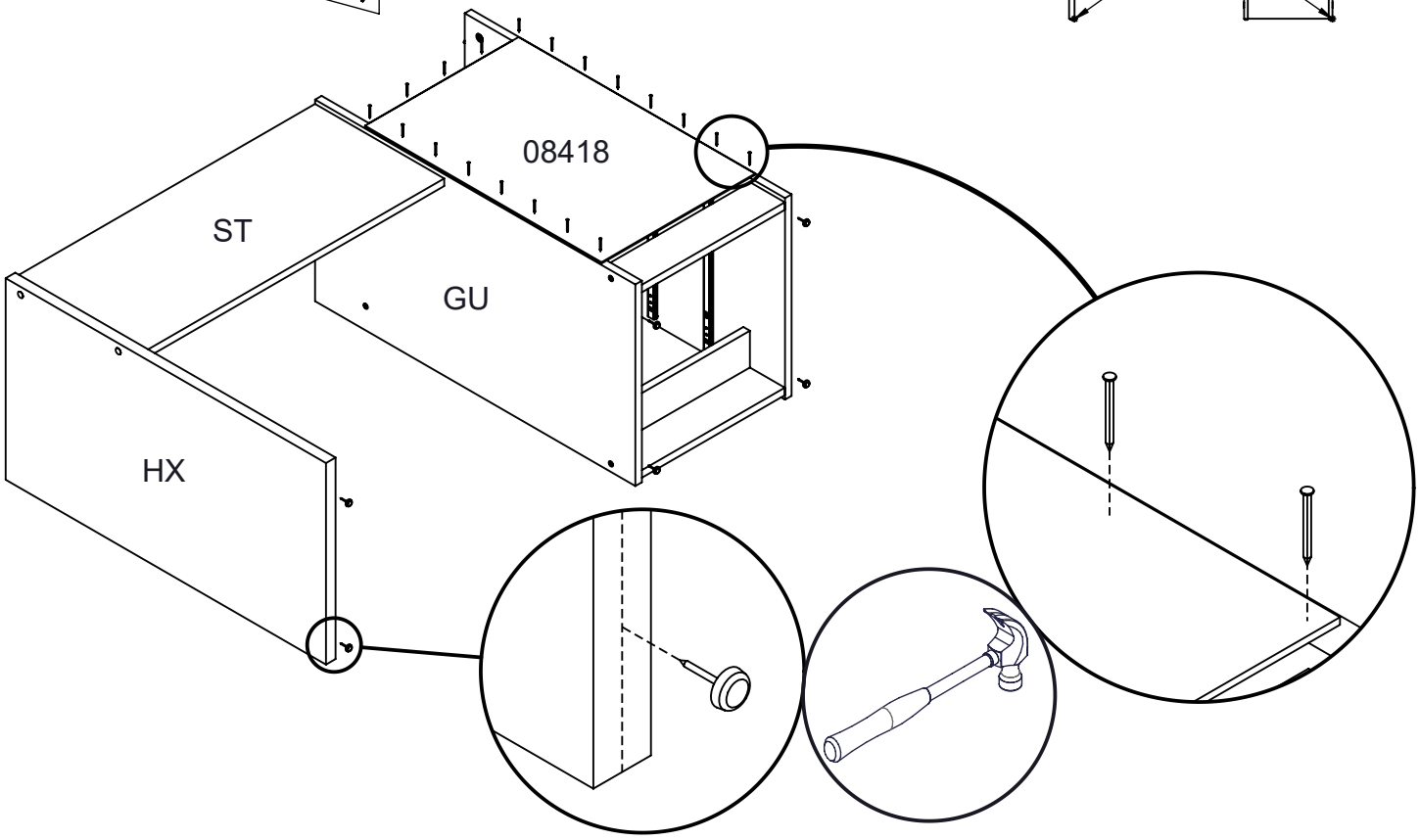

7

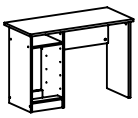

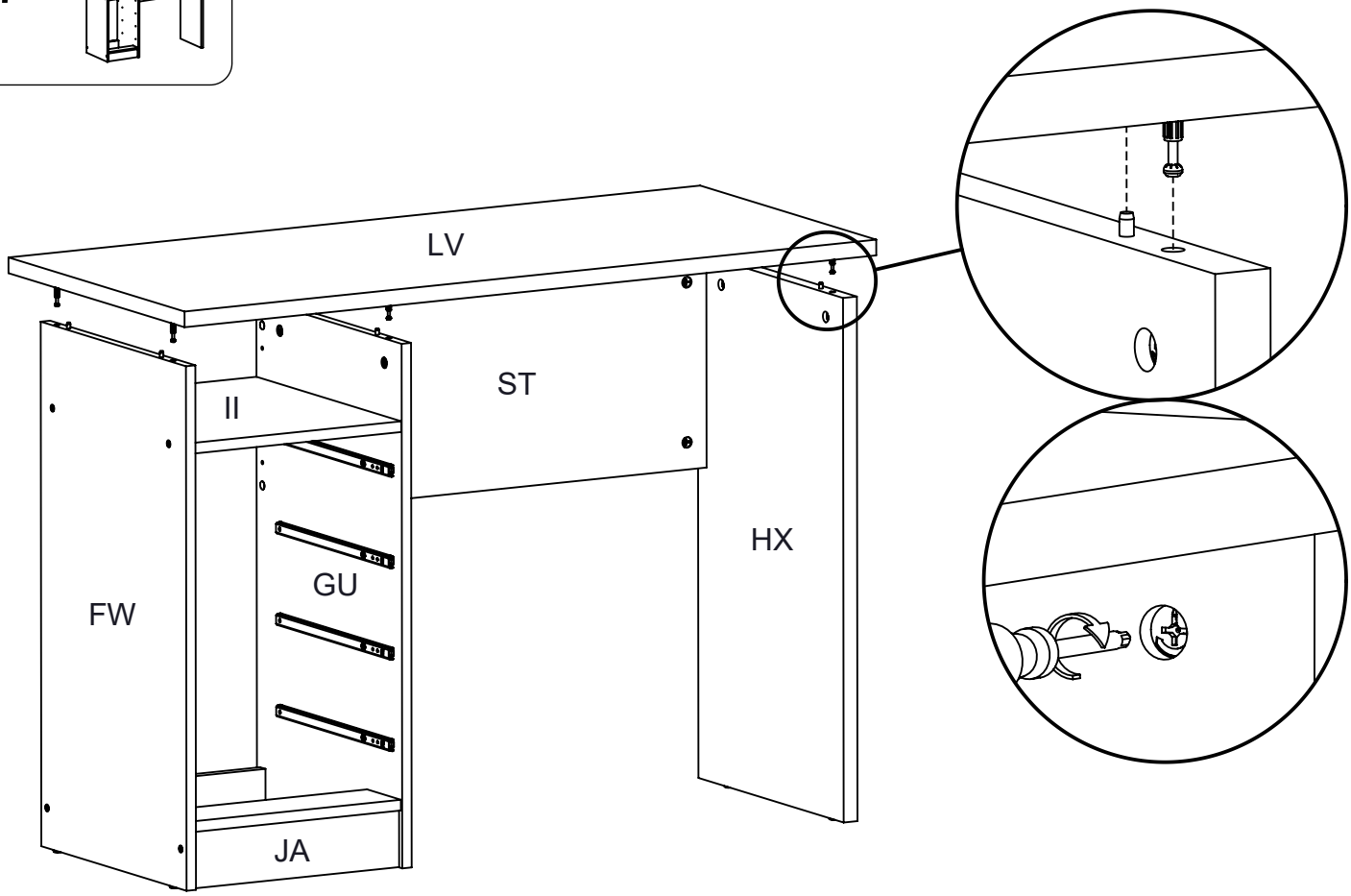

8

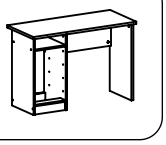

#10901
x1

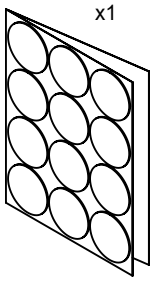

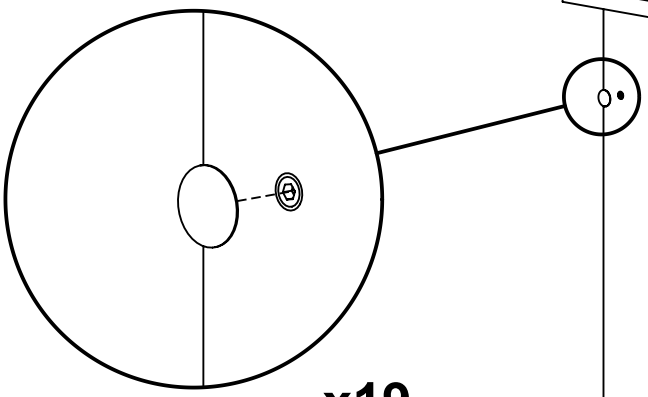

x19

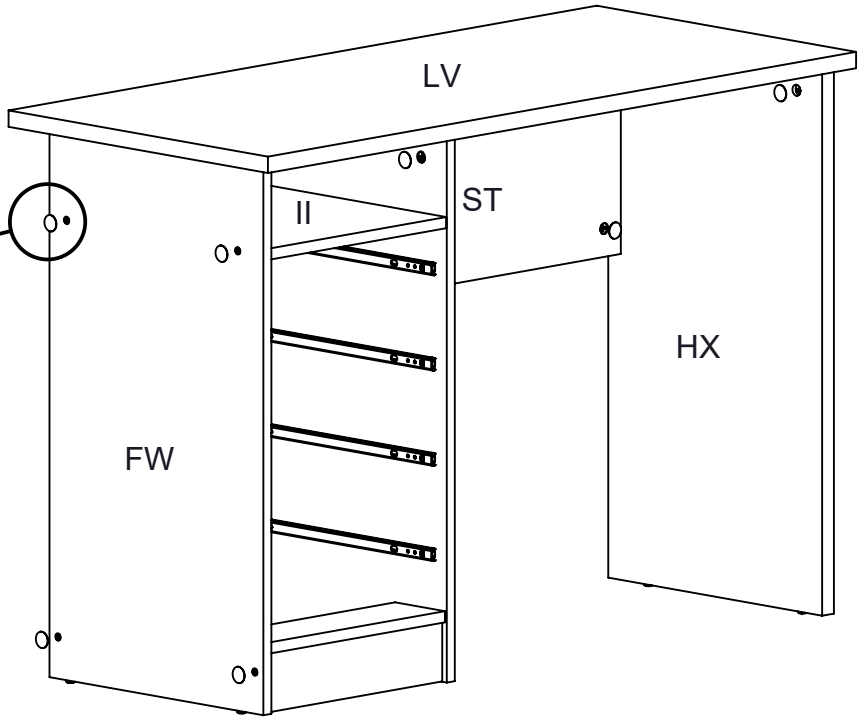

9

20203
x8

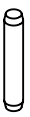

31513
x8

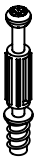

31687
x8

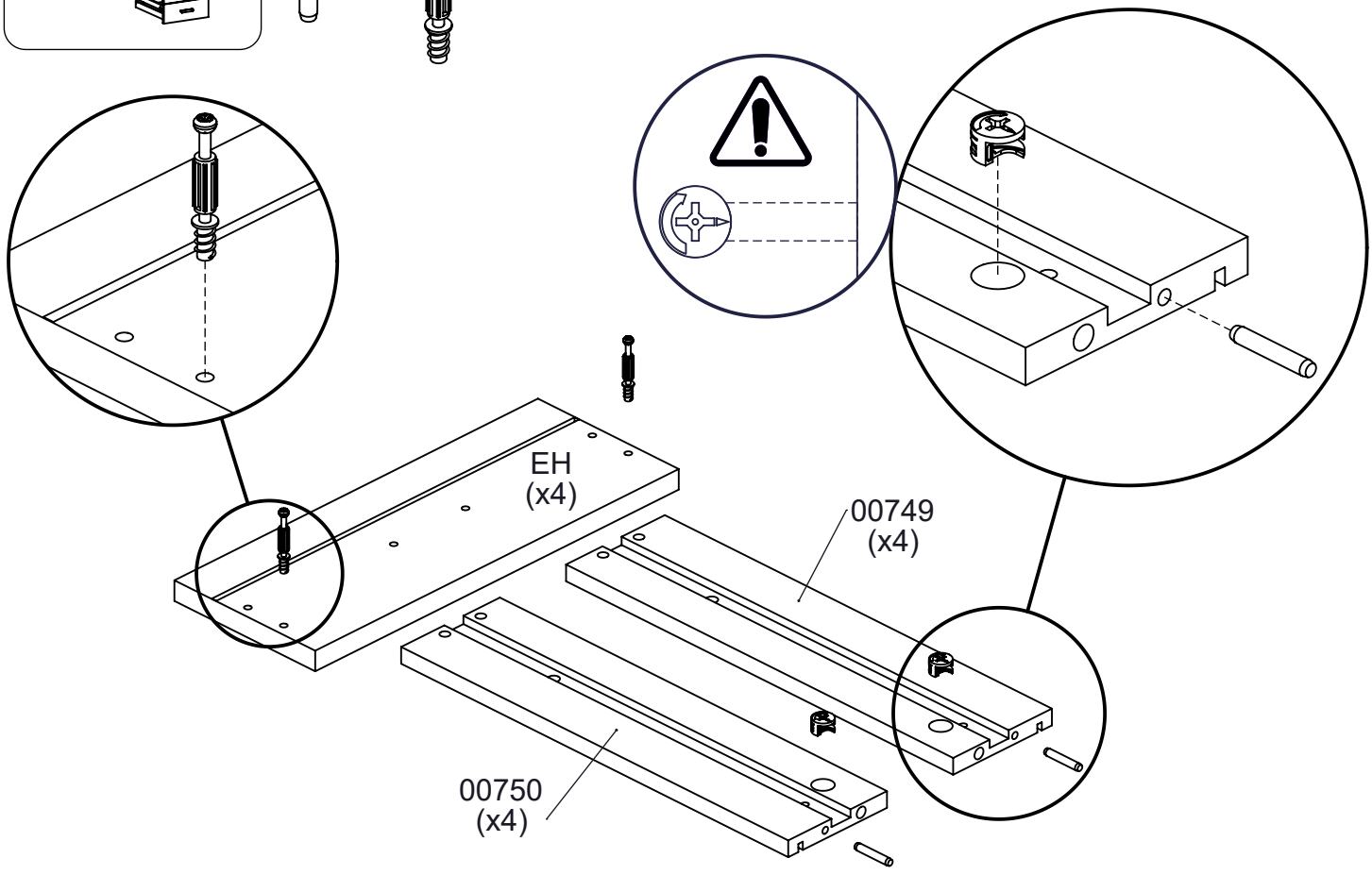

10

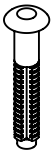

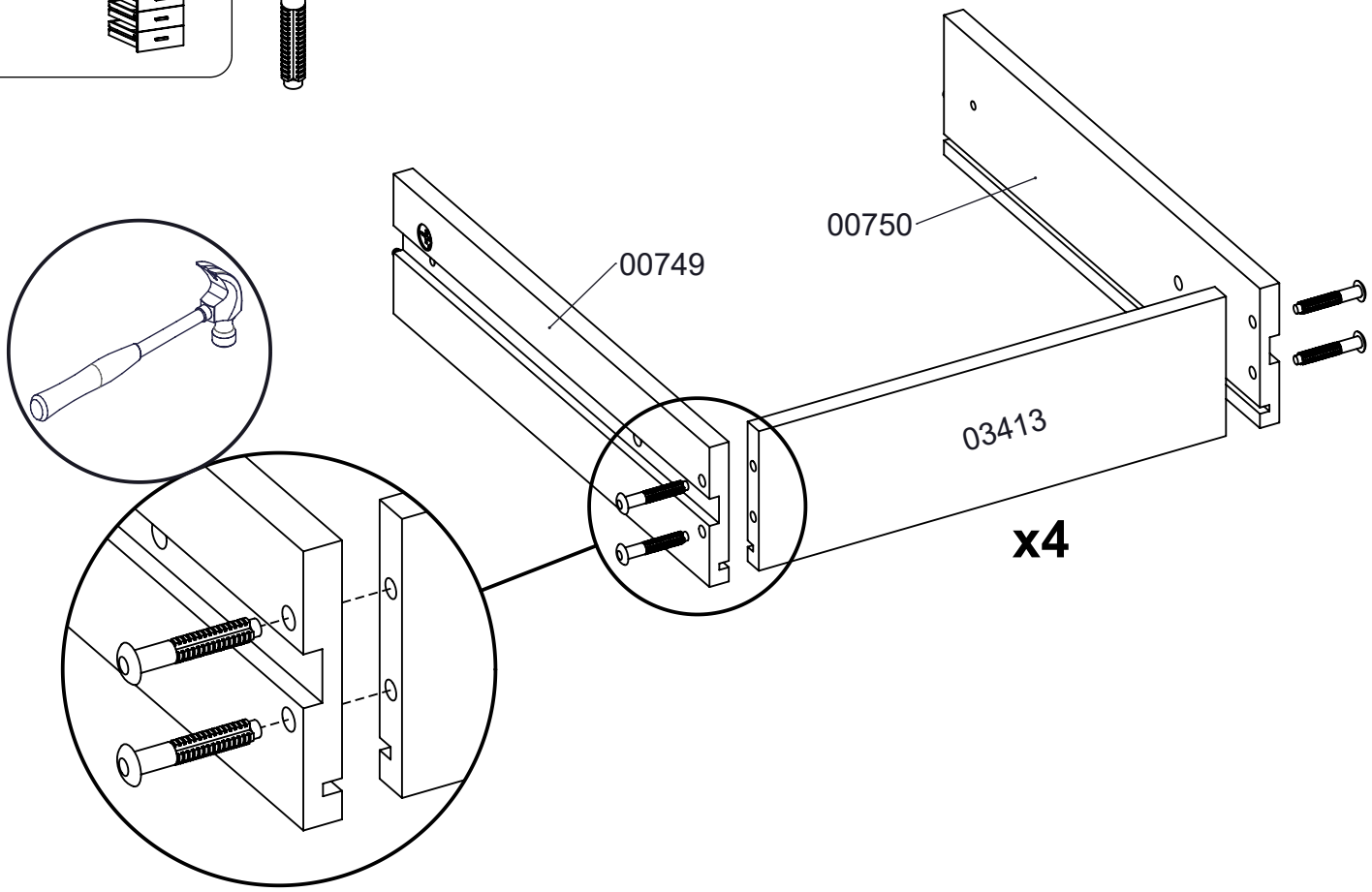

11

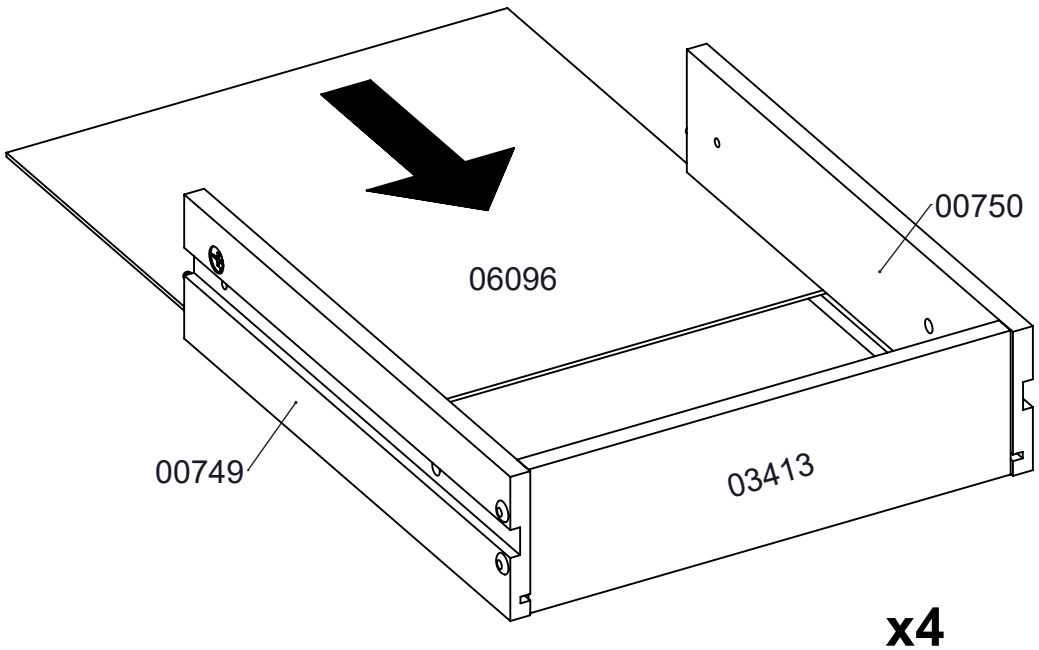

12

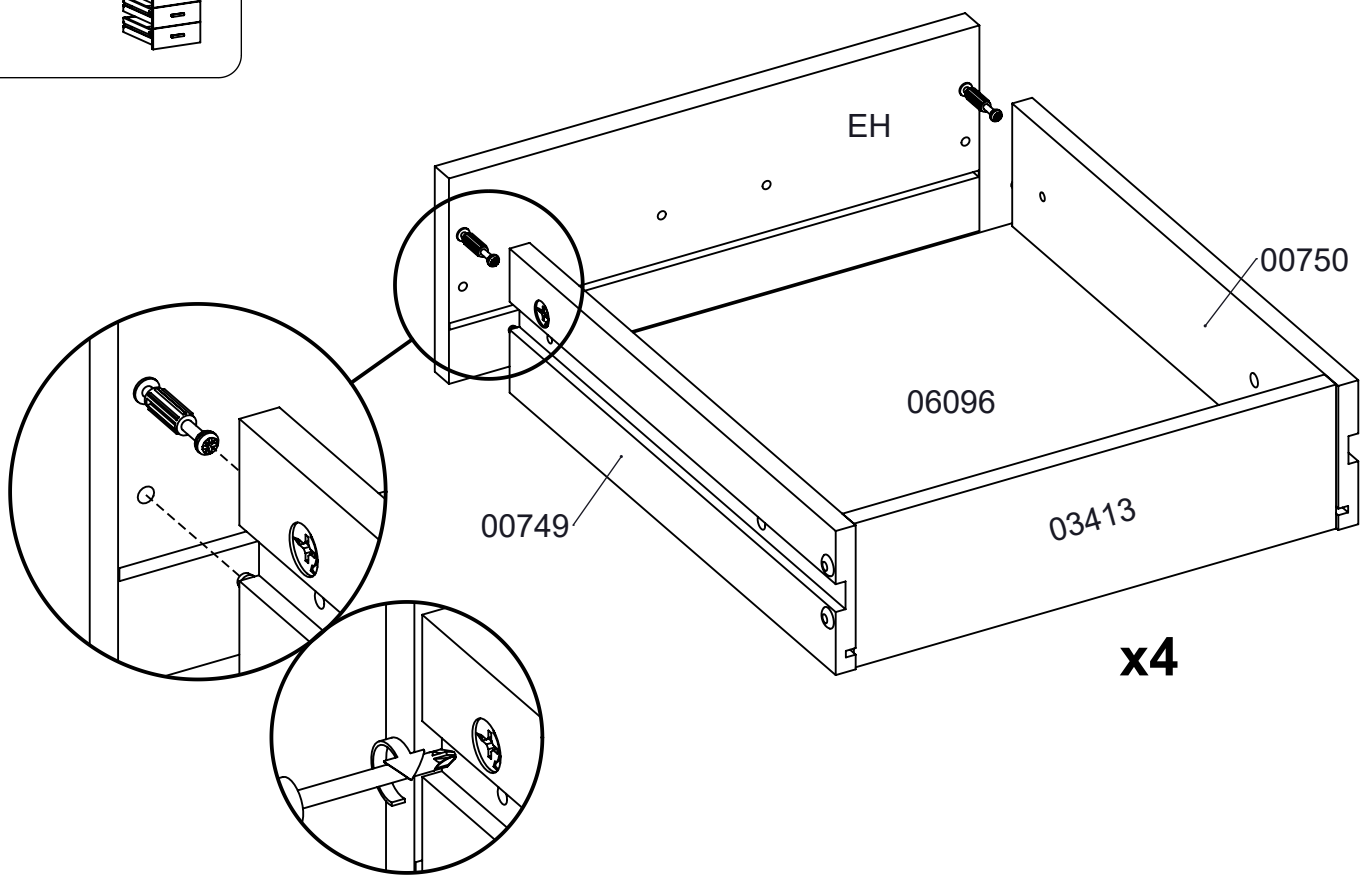
EH
00750
06096
00749
03413
x4

13

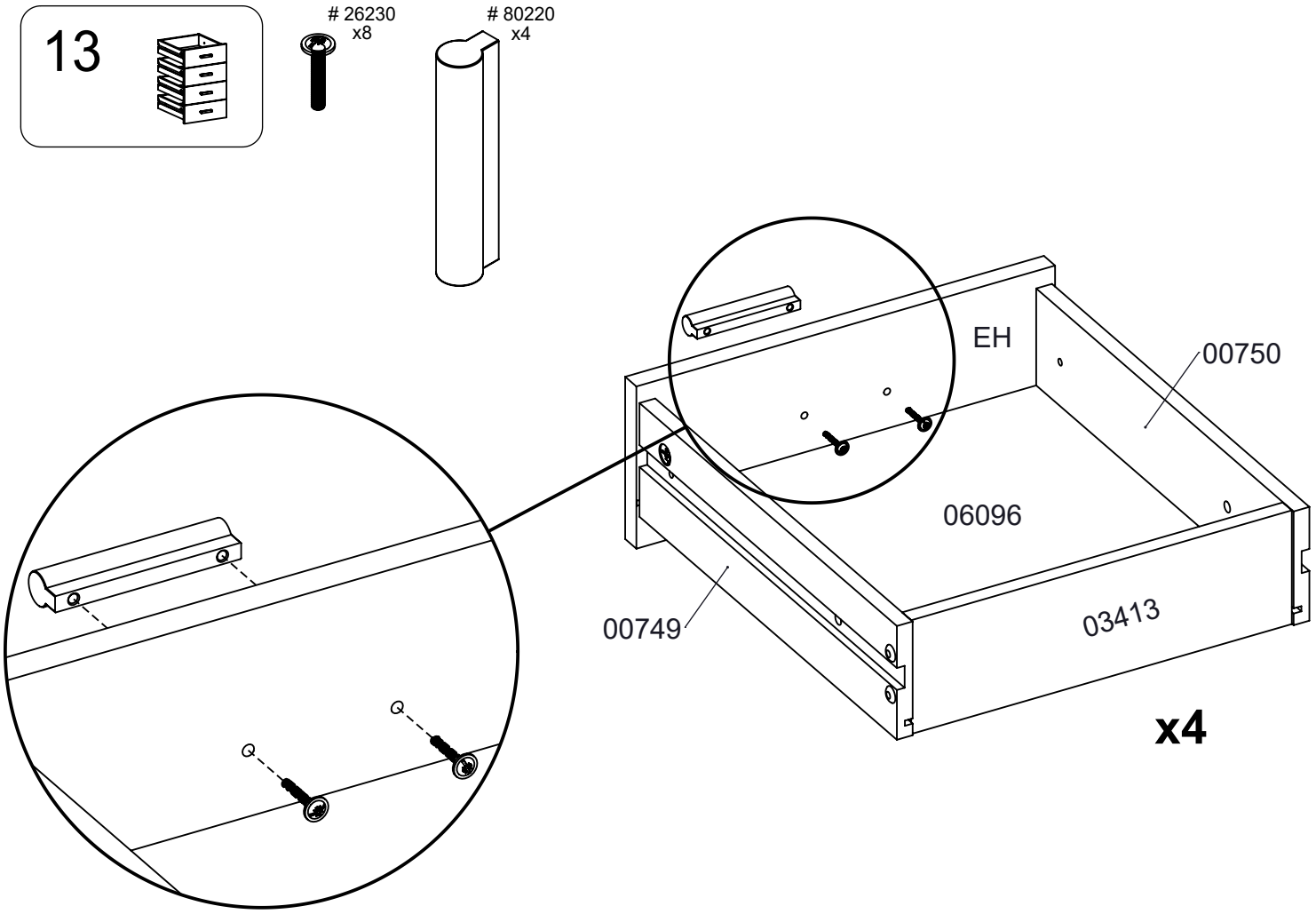
26230
x8
80220
x4
EH
00750
06096
00749
03413
x4

14

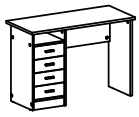

26214
x8

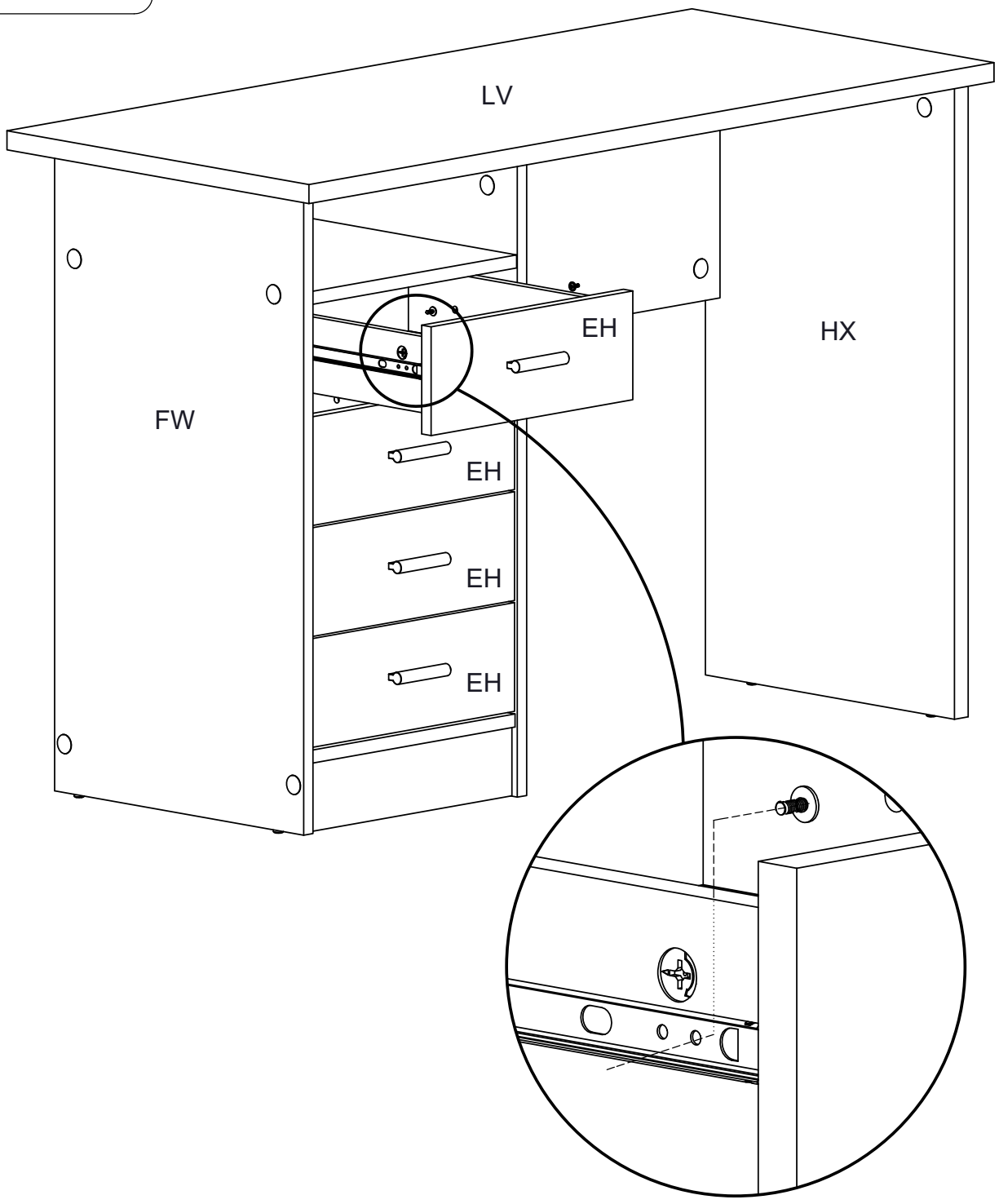

WE SUPPORT

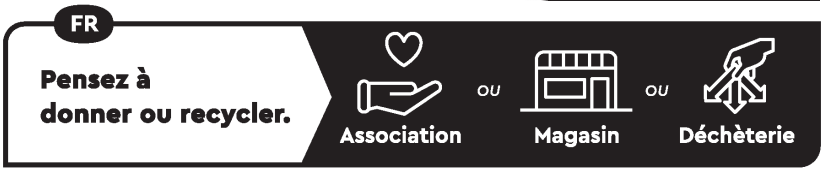

https://quefairedemesdechets.fr